KOBOLD DF-WM Flow Monitor

User Instructions

KOBOLD Instruments Inc. 1801 Parkway View Drive Pittsburgh PA 15205

Phone (412) 788-2830 • Fax (412)-788-4890 • www.koboldusa.com

Manual-DF-WM_03-05

Table Of Contents

KOBOLD DF-WM FLOW Monitor

1.0 General 1
2.0 Specifications 2
3.0 Installation Instructions 5
4.0 Operation 6
4.1 Turning the Unit On 6
4.2 Adjustment of the Setpoint 6
4.3 Flow Measurement 6
5.0 Arrival of Damaged Equipment 7
6.0 Maintenance 7
7.0 Need Help? 7

List of Diagrams

Diagram 2.4: Sensor Dimensions 4
Diagram 3.1: Wiring 5

List of Tables

Table 2.1: Material Combinations and Maximum Limits 2
Table 2.2: Electrical Data 3
Table 2.3: Flow Ranges and Fitting Sizes 3

KOBOLD DF-WM FLOW Monitor
User Instructions

CAUTION: For safety reasons, please read the cautionary information located at the end of the manual, before attempting installation.

1.0 General

The KOBOLD DF-WM flow monitor is intended for use primarily as a flow monitor, with the additional ability to occasionally meter flow rate.

The DF-WM uses a paddle wheel to meter flow. The principle of operation is quite simple; the paddle wheel rotation is calibrated for flow rate. This rotation-flow relationship is linear in theory. In practice, theory is nearly borne out, leading to a very precise measuring device. Any nonlinearity is within the stated measurement error of the device.

The paddle wheel approach to flow measurement has the advantage that the instrument may be installed in any orientation; only the flow direction is specified. Further, this measurement technique is relatively insensitive to dirt in the medium (ferritic contaminants, however, must be avoided).

Incorporated in the DF-WM is a flow setpoint function (with relay) which can be set by the user to any value within the specified flow range. Through the use of the setpoint adjustment knob, its accompanying scale, and a momentary switch (the red button), flow rate may also be approximately determined. This last function is intended for only occasional use.

2.0 Specifications

Table 2.1: Material Composition & Operational Limits

Material Combination	I	II/IIB	III	IV *	VI *	VII *
Fittings	**NPT**	**NPT**	**NPT**	**NPT or FLANGE**	**NPT**	**NPT or FLANGE**
Housing	Trogamid®	PSU/PP	NP-Brass	316 SS	NP-Brass	316 SS
Window	Trogamid®	PSU/PP	Trogamid®	PSU	NP-Brass	316 SS
Fittings	NP-Brass	316 SS/PP	NP-Brass	316 SS	NP-Brass	316 SS
Locking Pins	Brass	Brass	Brass	-	-	-
O-Rings	Buna-N	Viton®	Buna-N	Viton®	Buna-N	Viton®
Paddle Wheel	Delrin®	Teflon®	Delrin®	Teflon®	Delrin®	Teflon®
Axle	Brass	SS/ Ceramic	Brass	316 SS	Brass	316 SS
Axle Bearing	Teflon®	Teflon®	Teflon®	Teflon®	Teflon®	Teflon®
Orifice	Teflon® [2]	Teflon® [2]	Teflon® [2]	Teflon® [2]	Teflon® [2]	Teflon® [2]
STANDARD VERSION					HIGH PRESSURE VERSION	
Maximum Pressure	145 PSIG	145/85 PSIG	230 PSIG	230 PSIG	1450 PSIG	1450 PSIG or 580 PSIG with flange
Maximum Temperature	145°F	180°F	180°F	180°F	180°F	180°F

* Fittings not Rotatable

[2] SS on Model DF-XX01

Abbreviations:

PP - Polypropylene
GFR - Glass Fiber Reinforced
NP - Nickel Plated
PSU - Polysulfone

Table 2.2: Electrical Data

Power Supply (as specified):	24 VDC, 24 VAC, 110VAC, 230 VAC (+15% / -10%)
Power Consumption:	3.5 W max.
Relay:	
Maximum Voltage:	250V
Maximum Load:	5A
Operating Temperature:	-25° to 80°C (-25° to 60°C for DF-81..) -10° to 180°F (-10° to 140°F for DF-81..)
Wiring Connection:	5 Ft. PVC Cable (Standard), Plug with mating connector (Optional)
Environmental Protection:	IP65 (equivalent to NEMA 4)

Table 2.3: Flow Ranges & Fitting Sizes

Sensor Model Number	Range Water GPM	Standard Fittings NPT	Special Fitting Suffix "B"	Orifice Diameter Inches	Pressure Drop PSI
DF-XX01	0.02 - 0.14	1/8"	1/4"	0.04	10.2
DF-XX02	0.05 - 0.30	1/4"	3/8"	0.08	4.2
DF-XX03	0.05 - 0.60	1/4"	3/8"	0.08	10.4
DF-XX04	0.1 - 0.7	1/4"	3/8"	0.11	9.6
DF-XX05	0.2 - 2.5	3/8"	1/2"	0.19	12.1
DF-XX06	0.4 - 5.0	1/2"	3/4"	0.32	2.9
DF-XX07	0.5 - 6.0	3/4"	1"	0.32	4.4
DF-XX08	0.5 - 12	3/4"	1"	0.49	4.4
DF-XX09	1.0 - 25	1-1/4"	1-1/2"	0.49	15.9
DF-XX10	1.5 - 36	1-1/4"	1-1/2"	0.73	13.5

Diagram 2.4: Sensor Dimensions

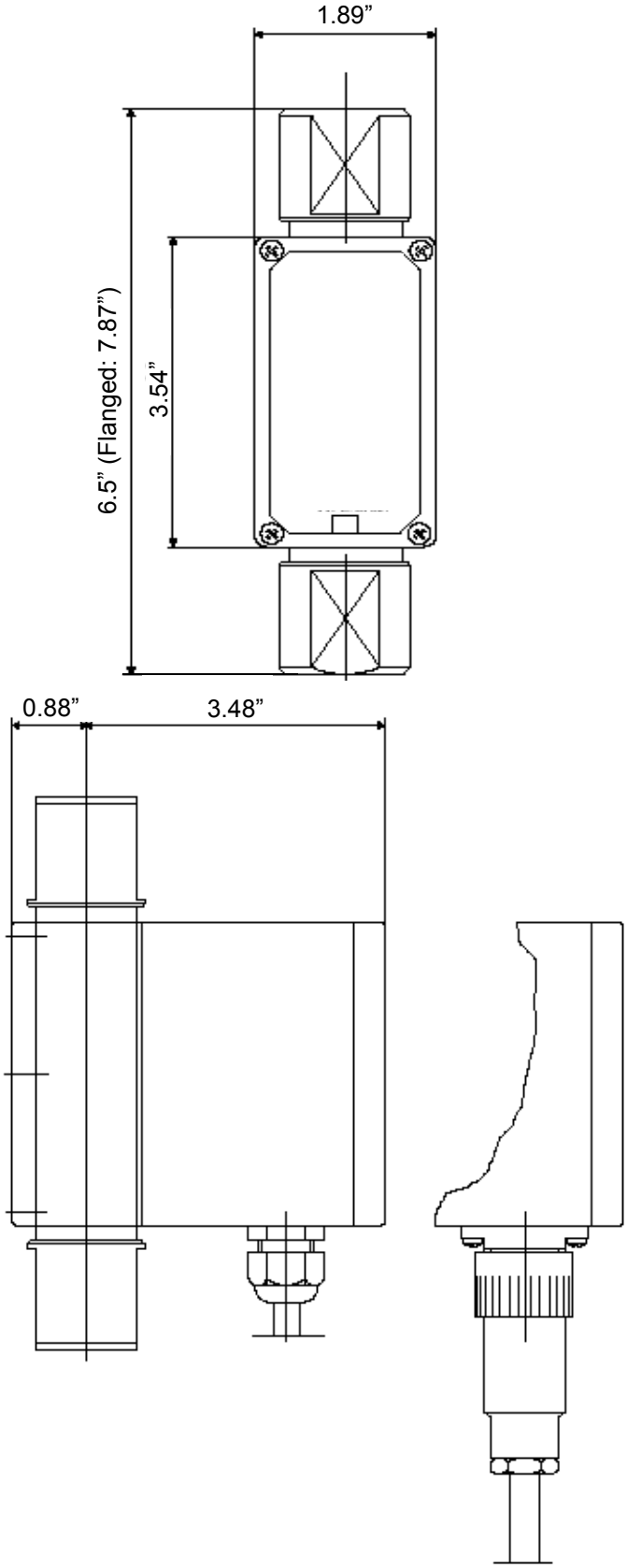

3.0 Installation Instructions

CAUTION: For safety reasons, please read the cautionary information located at the end of the manual, before attempting installation.

To install, proceed as follows:

1. Make sure that the actual flow rate in your system lies within the flow range of the instrument. The flow range can be read off the identification tag. Flow rates in excess of 120% of the range maximum will, in continuous use, lead to bearing and paddle damage.

2. Ensure that the power supply voltage is in accordance with that specified on the identification tag. Electrical connections are made using the standard 5-wire cable (or via the optional 6-pin plug) as specified by the following wiring diagram:

Diagram 3.1: Wiring

Cable Connection

Wire 1: AC Power, DC Power **(-)**

Wire 2: AC Power, DC Power **(+)**

Wire 3: Relay N/O Contact

Wire 4: Relay Common

Wire 5: Relay N/C Contact

Plug Connection

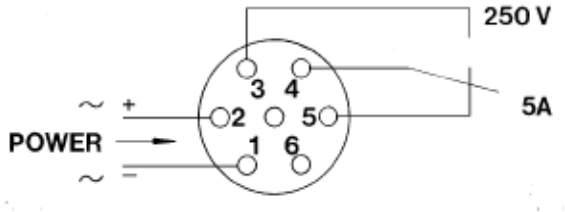

You are now ready to mechanically connect the unit.

1. The media flow direction is indicated by an arrow on the housing. The flow sensor may be mounted in any orientation as long as the front face of the device remains in a vertical plane. No straight run is required.
2. The flow sensor must be mounted so that the measuring housing normally remains filled with fluid during operation. We recommend mechanically mounting the sensor approximately 2” from each connection.
2. Take care not to place stresses on the housing both during installation. An appropriate pipe thread sealer is recommended for all threaded connections. Use a wrench to hold the instrument fittings static while you tighten the fittings on your pipe.
3. Should there be small amounts of ferrite contaminants in the medium, we recommend the installation of our magnetic filter (type MFR- or equivalent).
4. Medium should always be introduced to the system slowly to avoid pressure surges which could damage the instrument.

4.0 Operation

The device is delivered fully calibrated and ready for use. The calibration screws (found inside the electronics housing), **MUST NOT** be adjusted by the user. Customer adjustment of these screws necessitates a recalibration of the unit. The precision of the instrument is guaranteed only if the calibration screws have not been adjusted. Modification of the sensor (by physically modifying or replacing sensor components) requires recalibration of the unit if the specified accuracy is to be maintained.

4.1 Turning the Unit On

The device is operational as soon as it is wired into a power supply. A green "ON" LED indicates that power is present at the unit by lighting up.

4.2 Adjustment of the Setpoint

To adjust the setpoint, simply align the indicator mark on the potentiometer knob on electronics panel), with the desired flow value on the scale. Flashing of the red "ALARM" LED indicates that the media flow is below the setpoint value

4.3 Flow Measurement

The DF-WM is primarily a flow monitoring device (i.e., it signals an alarm when a preset flow limit is/is not met). It can, however, be used to measure flow. This is done as follows:

1.Depress the square red button on the face of the unit. This disengages the setpoint relay.

2. Turn the potentiometer from the smallest to the largest flow value on the flow scale, until the red LED starts to flash. The flow rate may now be read off the potentiometer scale.

3.Reset the potentiometer to the desired setpoint value.

4.Release the red button.

Note: After the setpoint has been adjusted, or the flow rate measured, it is important that the lid on the face of the electronics housing is resealed tightly. This ensures that protection according to IP 65 is maintained.

5.0 Arrival of Damaged Equipment

Your instrument was inspected prior to shipment and found to be defect-free. If damage is visible on the unit, we advise that you carefully inspect the packing in which it was delivered. If damage is visible, notify your local carrier at once, since the carrier is liable for a replacement under these circumstances. If your claim is refused, please contact Kobold Instruments for further advisement.

6.0 Maintenance

The KOBOLD DF-WM requires little maintenance provided the measured medium is kept free of contaminants. In particular, ferritic pollutants can cause problems for this device due to the incorporation of magnets into the paddle wheel. To avoid this, we recommend the installation of a magnetic filter, such as Kobold's model MFR or equivalent.

Do NOT tamper with the electronics as this voids your warranty.

7.0 Need help with your DF-WM Flowmeter?

Call one of our friendly engineers at 412-788-2830.

Caution

PLEASE READ THE FOLLOWING GENERAL FLOW METER / MONITOR WARNINGS BEFORE ATTEMPTING INSTALLATION OF YOUR NEW DEVICE. FAILURE TO HEED THE INFORMATION HEREIN MAY RESULT IN EQUIPMENT FAILURE AND POSSIBLE SUBSEQUENT PERSONAL INJURY.

- **User's Responsibility for Safety:** KOBOLD manufactures a wide range of process sensors and technologies. While each of these technologies are designed to operate in a wide variety of applications, it is the user's responsibility to select a technology that is appropriate for the application, to install it properly, to perform tests of the installed system, and to maintain all components. The failure to do so could result in property damage or serious injury.
- **Inspect instrument for damage upon arrival:** Cracked, fractured, bent or otherwise damaged instruments must not be put into use, since the device is weakened to an unknown extent. Refer to Section 5.0, Arrival of Damaged Equipment, for additional information.
- **Media and Chemical Compatibility:** The maximum tolerances of the device have been determined using water. If using other media, especially corrosive media, it is critically important that the user determine chemical compatibility with our instruments. KOBOLD Instruments Inc. cannot accept responsibility for failure and consequences resulting from use of media other than water.
- **Material Compatibility:** Make sure that the model which you have selected is chemically compatible with the application liquids. While the meter is liquid and spray resistant when installed properly, it is not designed to be immersed.
- **Proper Installation in Flow System:** Install the device in a fully supported position within your flow system. This avoids excessive stresses which may damage the instrument. In particular:

  a.) Ensure that the plumbing leading to and from the instrument is fully supported and that the instrument does not perform the physical function of a joint.

  b.) When calculating stress on the device caused by plumbing, the weight of the medium in the pipes must be considered as well.

  c.) Misaligned runs of rigid piping can cause large stresses when connected to the instrument. Do not connect in such a fashion.

  d.) When connecting fittings, hold the instrument fittings rigid with a correctly sized wrench. Do not install by twisting the instrument into the pipe fittings.

  e.) Do NOT install by holding the device housing to provide counter-torque to the pipe fitting.

  f.) Use an appropriate amount of PTFE tape on male threads of fitting. This reduces the twisting stresses produced by tightening the fittings into each other.

  g.) Do not use pliers or wrenches on the housing, as this may damage it.

  h.) Do not overtighten, as this may fracture the fittings.

- **While Operating the Flow System:** During operation, there are a number of situations to avoid:

  a.) The sudden cessation of fluid flow causes what is typically referred to as "water hammer". Most people are familiar with this phenomenon from their home experience - it is the cause behind the loud clank of water pipes which occurs when faucets are turned off too suddenly. The cause behind this "water hammer" is quite easy to visualize. Water is fairly massive. The amount of water in long runs of pipe is quite substantial. When the faucets are turned off suddenly, especially from a full on condition, the water has considerable momentum and does not want to stop flowing. The situation is similar to stopping a car by running into a wall, rather than by applying brakes. Both are sudden rather than gradual. The damage to the wall can be substantial (not to mention the car).

  b.) The "water hammer" causes surges in fluid pressure which could cause the measurement instrument's pressure limit to be exceeded, resulting in failure and possible personal injury.

  c.) Fluid surges, as well as the water hammer, can be particularly damaging to empty flowmeters since there is no back pressure in the device. The damage is caused, once again, by momentary excess pressure. To avoid these surges, fluid lines should remain full (if possible) and water flow should be introduced to the device slowly.

  d.) If the instrument is isolated with inlet and outlet valves, the flowmeter must be completely drained when said valves are both closed. Failure to do so could result in damage to the device caused by thermal expansion of fluid.

  e.) Freezing of water in the instrument must be avoided since the resultant expansion will damage the flowmeter and make it unsafe for use.

- **Wiring and Electrical:** Section 2.0, Specifications and Section 3.0, Installation Instructions, provide the voltage and current limitations and the wiring for the various sensor types. The sensor electrical ratings should never be exceeded. Electrical wiring of the sensor should be performed in accordance with all applicable national, state and local codes.

- **Temperature and Pressure:** Section 2.0, Specifications, provides the temperature and pressure limits for each model. Operation outside these limitations will cause damage to the unit and can potentially cause personal injury. Fluid should never be allowed to freeze inside the sensor.

- **Make a Fail-safe System:** Design a fail-safe system that accommodates the possibility of switch or power failure. In critical applications, KOBOLD recommends the use of redundant backup systems and alarms in addition to the primary system.